AXOR

hansgrohe

| | |
|---|---|
| Brand | AXOR |
| Art. Name | **AXOR Montreux** Single-Hole Faucet 100 with Pop-Up Drain, 1.2 GPM |
| Art. Nr. | 16515341 |
| Surface | brushed black chrome |
| Pos. | 1 |

## Product Picture

## Drawing

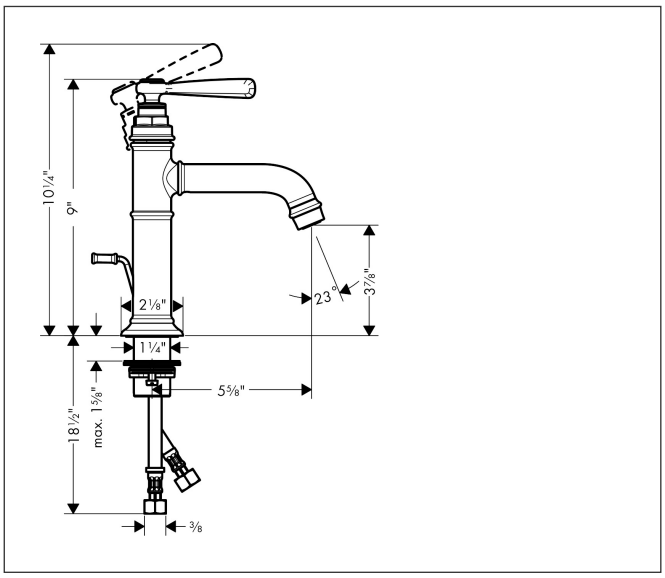


## Features

- Spray modes: Aerated spray
- Flow: 1.2 GPM (4.5 L/Min)
- Ceramic cartridge
- Includes pop-up drain

## Technology

Comfort Zone

EcoRight